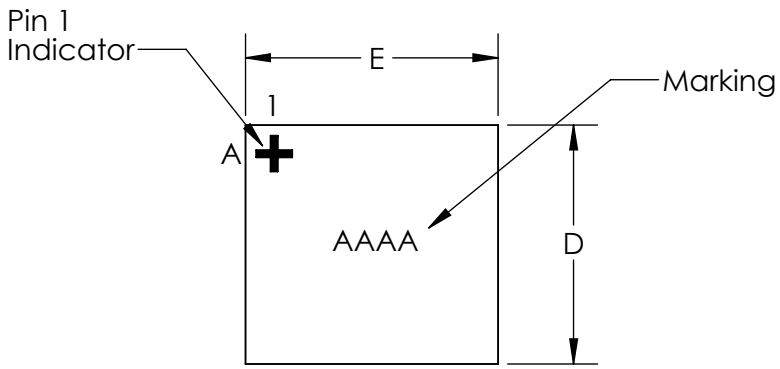

TOP VIEW

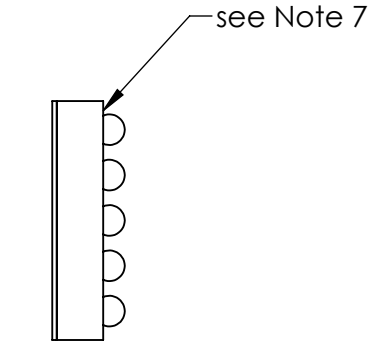

SIDE VIEW

COMMON DIMENSIONS	
A	0.64 ±0.05
A1	0.19 ±0.03
A2	0.45 REF
A3	0.040 BASIC
b	∅0.27 ±0.03
D	2.107 ±0.025
E	2.227 ±0.025
D1	1.60 BASIC
E1	1.60 BASIC
e	0.40 BASIC
SD	0.00 BASIC
SE	0.00 BASIC
DEPOPULATED BUMPS: NONE	

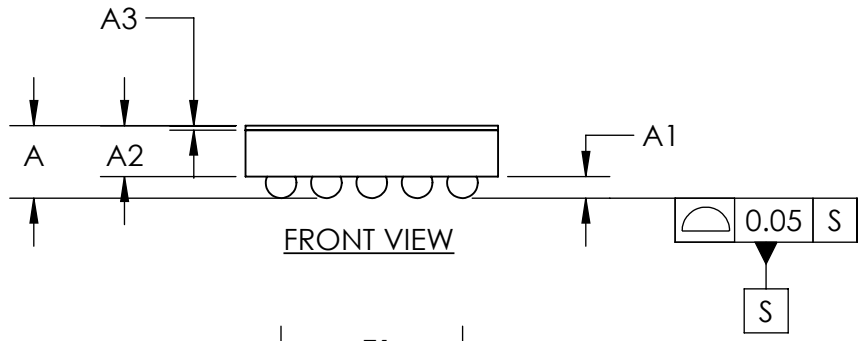

FRONT VIEW

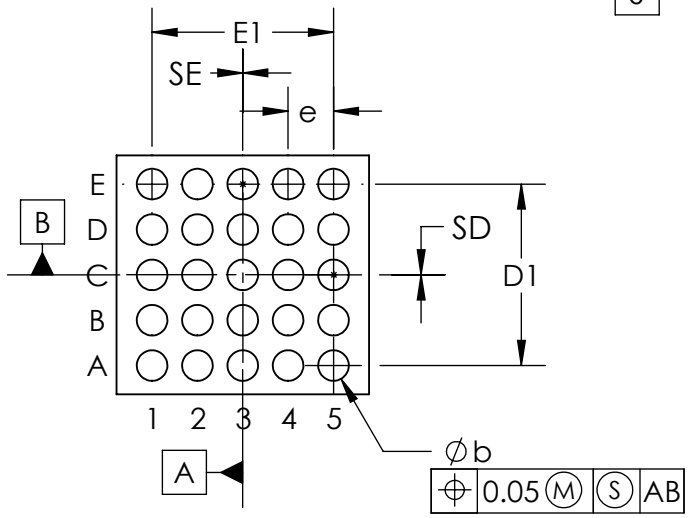

BOTTOM VIEW

NOTES:
1. Terminal pitch is defined by terminal center to center value.
2. Outer dimension is defined by center lines between scribe lines.
3. All dimensions in millimeter.
4. Marking shown is for package orientation reference only.
5. Tolerance is ± 0.02 unless specified otherwise.
6. All dimensions apply to PbFree (+) package codes only.
7. Front - side finish can be either Black or Clear.

- DRAWING NOT TO SCALE -

maxim integrated™

TITLE
PACKAGE OUTLINE 25 BUMPS
WLP PKG. 0.40 mm PITCH, W252M2+1

APPROVAL	DOCUMENT CONTROL NO.	REV.	
TIE WANG 11/04/14	21-0788	A	1/1